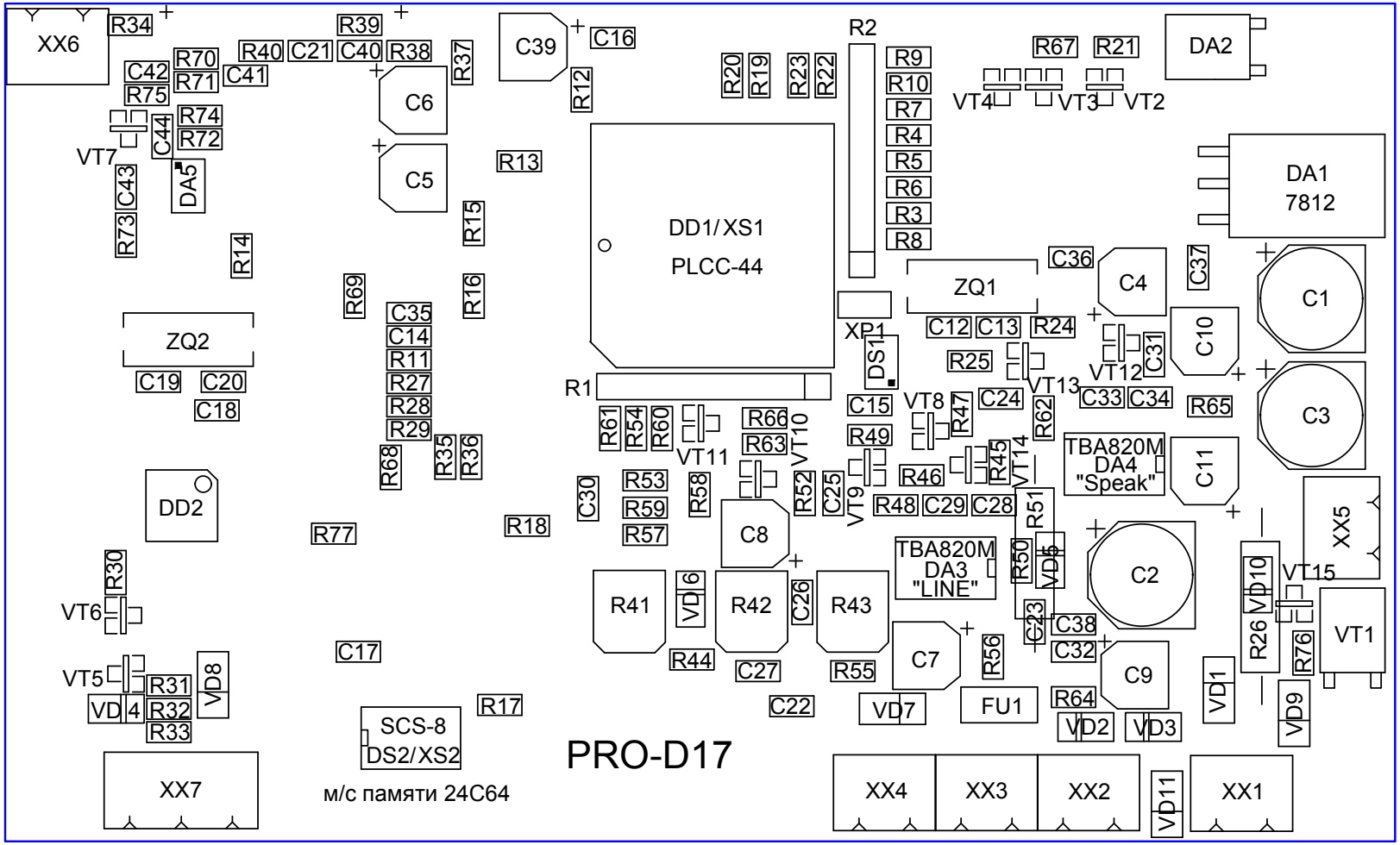
XX6
R34
R39
R40
C21
C40
R38
R37
C39
C16
R2
R67
R21
DA2
R70
C42
R71
C41
R75
C6
R12
R20
R19
R23
R22
R9
R10
R7
R4
R5
R6
R3
R8
VT4
VT3
VT2
R74
C44
R72
VT7
C5
R13
DA1
7812
C43
DA5
R73
R15
DD1/XS1
PLCC-44
R14
C36
C4
C37
C1
R69
R16
ZQ1
C35
C14
R11
R27
R28
R29
ZQ2
C19
C20
C18
XP1
C12
C13
R24
C10
DS1
R25
VT12
C31
VT13
C33
C34
R65
C3
R1
C15
VT8
C24
R47
R62
R61
R54
R60
R66
R63
VT10
R49
VT11
R45
VT14
TBA820M
DA4
"Speak"
C11
R68
R35
R36
R46
R53
R59
R57
R58
R52
C25
VT9
R48
C29
C28
R51
XX5
DD2
C30
C8
R77
R18
TBA820M
DA3
"LINE"
R50
VD5
C2
VD10
VT15
R30
R41
VD6
R42
C26
R43
C23
C38
R26
R76
VT1
VT6
C17
R44
C27
R55
C7
R56
C32
C9
VD1
VT5
R31
VD8
VD4
R32
R33
R17
C22
VD7
FU1
R64
VD2
VD3
VD9
SCS-8
DS2/XS2
PRO-D17
XX7
м/с памяти 24C64
XX4
XX3
XX2
VD11
XX1